71-1154-250
10/09

VISIONLINE

Lionel VISION™ Line Pennsylvania CC2s 0-8-8-0 Locomotive and Tender Owner's Manual

Featuring

LEGACY RAILSOUNDS

LIONEL CONTROL SYSTEM LEGACY

ODYSSEY™ II SYSTEM

Congratulations!

As a VISION Line™ locomotive, the CC2s is the most technically advanced and realistic O Gauge locomotive ever made. On the outside, this gold standard engine features more realistic detail, decoration, and moving parts than ever before. Inside the body you'll find the highest caliber electronics and sounds ever to give you unprecendented operational realism. In addition to all the great features found on Lionel Standard O locomotives, your CC2s is equipped with an array of other realistic and dramatic effects including a swinging bell, blow-down smoke, and whistle steam effects synchronized to the Legacy RailSounds sound system. More than ever before, you are in control of the realistic effects and operation of your locomotive. The VISION Line CC2s 0-8-8-0 steam locomotive is ready for duty on your layout.

Unpacking Your VISION Line locomotive

Because of all the fine details and special features on your VISION Line CC2s, we thought it best to really pack it tight, even better than our normal sturdy packing. Inside the box, you will find two foam containers with wooden bases. Each one is held together with velcro belts. Set them on a large flat surface and remove the belts carefully, then lift off the foam. Carefully look at the bottom of the wooden bases and locate the screws. Remove these screws and then the plastic wrapping. Your VISION locomotive is now ready to be placed on the track. **PLEASE** see the smoke fluid section on page 35 Fig. 9 before you run your locomotive.

VISION Line™ features of this locomotive

New Steam and Smoke Features! Lionel introduces **TruRail Steam**, a new CAB-controlled, variable-intensity steam and smoke effect. See all the features operators can simulate:

- Dramatic and realistic blow-down effects
- New and accurate whistle steam effects
- Two fan-driven smoke units with adjustable smoke output deliver varying intensities of smoke to the main stack and to the blow-down valve and whistle
- All steam effects are synchronized to the RailSounds sound system and are completely user controllable

Upgraded Sound Features! The LEGACY RailSounds sound system synchronizes realistic sounds to nearly all aspects of locomotive operation. Just look at how many ways you can enhance the sound experience:

- **TruRail Steam** Control realistic sounds synchronized to features including blow-down and whistle steam effects
- The independently adjustable volume control allows you to use the Remote Controller to lower the level of background effects (such as chuffing) while keeping operator controlled effects (such as the whistle) at full volume
- **TruRail Dialog** – Activate our upgraded dialog features which boast the most authentic railroad terminology possible. Also, dialog scenarios can change with engine operation and user control
- **TruRail Signals** – Activate the “quilling” whistle and user-playable bell featuring continuous or single strike sounds with variable intensity. There’s a dedicated CAB-2 slide lever control for both whistle and bell functions
- **TruRail Laboring** – Control the variable laboring sounds with 32 levels of simulated dynamic load of the locomotive
- **TruRail Chuff** – Experience prototypical four-chuffs per revolution chuffing sound synchronized with linkage and drive wheel position.

The most detail on any steam locomotive we've ever made!

- Movable shutters on the cab windows
- Decorated cab interior with enhanced panel details
- Upgraded firebox lighting and new opening firebox door
- Improved realistic detail behind smokebox door
- Prototypical spacing between locomotive and tender
- Moving bell, synchronized to bell sounds
- Rule 17 lighting features – when the locomotive stops the headlight dims

Standard features for this locomotive

- LEGACY Control System – You can run the engine in LEGACY Control mode, in TrainMaster Command Control mode, or in Conventional mode with a standard transformer
- Odyssey II Speed Control with ON/OFF switch
- High-torque motor with momentum flywheel
- Wireless Tether connection between locomotive and tender
- Front ElectroCoupler on locomotive
- ElectroCoupler on rear of tender
- Die-cast metal locomotive body, frame, and trucks
- Die-cast metal tender body and trucks
- Traction tires
- Accurate separately-applied builder's plates
- Engineer and fireman figures
- Opening roof hatch on cab
- Cab window glass
- Enhanced realistic lighting in cab interior
- Directional lighting including operating headlight and back-up light
- Illuminated front classification lights on locomotive
- Illuminated rear marker lights on tender
- Illuminated number boards
- Movable scale deck plate between locomotive and tender
- Variable ashpan glow

Table of contents

VISION Line Enhancements

VISION Line features will be described in each section where it is relevant to the operation of your locomotive and the system you use. Some LEGACY and VISION Line features may not be available in the conventional or TMCC environment.

Contents of your locomotive box

1 Locomotive

1 Tender

1 Smoke fluid bottle

1 Wrench

4 Replacement traction tires

1 Owner's manual

1 Engine memory module

1 Smoke fluid funnel

1 VISION Line Locomotive Warranty Card

Quick Start

Note! Power your locomotive with an alternating-current (50-60Hz AC) transformer only. Powering your locomotive with a direct-current (DC) transformer, or in excess of 19 volts AC, may result in damage to sensitive electronic components.

LEGACY Control operations

For the finest operating experience, your locomotive is fully compatible with the new LEGACY Control System.

To operate in LEGACY mode, you need a LEGACY Command Base and LEGACY CAB-2 Remote Controller. Both products are offered together in the LEGACY Command Set, 6-14295.

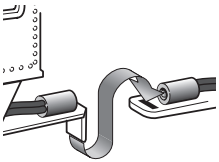

Figure 1. Drawbar connection

1. **Turn off track power and plug in the LEGACY Base.**
2. **Place your locomotive on Lionel or Lionel-compatible O-54 or larger track and connect the drawbar between the locomotive and tender as illustrated in Figure 1.**
3. **Increase track power voltage to full power (no more than 19 volts AC).**
4. **Press ENG and 1 to address your locomotive with your LEGACY CAB-2 Remote Controller.**
5. **Throttle up and move ‘em out.**

TrainMaster Command Control operations

To operate your locomotive in the Command Control environment, you need a Command Base (available separately, 6-12911) and a CAB-1 Remote Controller (available separately, 6-12868).

1. **Turn off track power and plug-in the Command Base.**
2. **Place your locomotive on Lionel or Lionel-compatible O-54 or larger track and connect the drawbar between the locomotive and tender as illustrated in Figure 1.**
3. **Increase track voltage to full power (no more than 19 volts AC).**
4. **Press ENG and 1 to address your locomotive with your CAB-1 Remote Controller.**
5. **Throttle up and move ‘em out.**

Transformer operations

1. **Turn off track power.**
2. **Place your locomotive on Lionel or Lionel-compatible O-54 or larger track and connect the drawbar between the locomotive and tender as illustrated in Figure 1.**
3. **Power your locomotive at 12-18 volts with your alternating current (AC) transformer.**
4. **Wait three to eight seconds until the locomotive’s headlight illuminates and the LEGACY RailSounds sound system starts up.**
5. **Move ‘em out! Press the DIRECTION button on your controller, then throttle up.**

Note! For conventional operation there must not be a powered up Command Base anywhere in the area. The locomotive receives its signals through the airwaves. If a base is detected your locomotive will default to command mode.

Locomotive switch function overview

Locomotive switch location

The switches that control the features and programing of your locomotive are located under the sand dome hatch in front of the cab. When you lift up the hatch these switches are visable with their icons. Icons on the left hand side show the ON or RUN positions. Icons on the right hand side show the OFF or PROGRAM positions. On the inside of the lift off hatch, there are also words that help describe the function of each switch.

Looking down at the locomotive with the front facing to the right the switches are as follows:

Program Run Switch
Used to assign an ID# and reprogram the locomotive in LEGACY and Command operation when the switch is in the “PROG” position. Also used to “lock” your locomotive in a single direction, or neutral, in conventional operation when the switch is placed in the “PROG” position. See pages 21, 27, and 31.

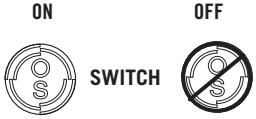

Odyssey II Speed Control System Switch
Used to turn the Odyssey II Speed Control System “on” and “off”.

Smoke Unit Switch
Used to turn the main smoke stack unit function “on” and “off”. This switch is "read" by your engine at start-up. Switching it after start-up will have no effect.

Whistle Steam Switch
Used to turn the whistle and blowdown steam effect “on” and “off”. This switch is "read" by your engine at start-up. Switching it after start-up will have no effect. **NOTE: This switch does NOT control Sound!**

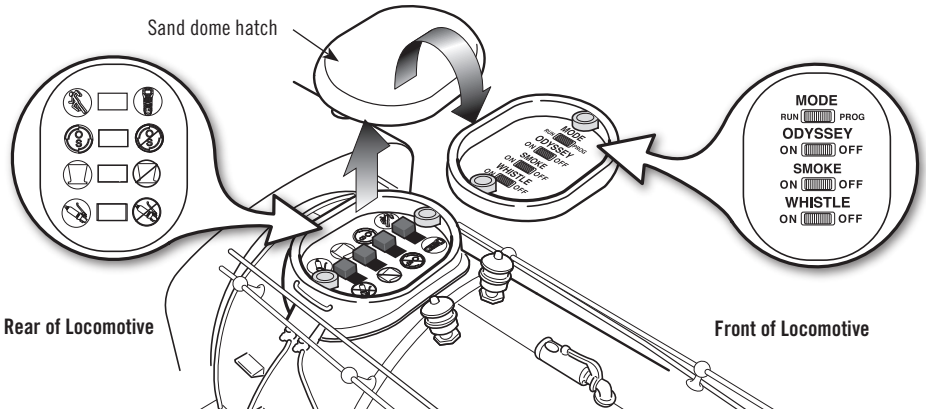

Figure 2. Locomotive switch locations

Locomotive switch function overview

Tender switch location

The switches that control the RailSounds features and volume of your locomotive are located under the hatches at the rear of the tender. When you lift up the hatches these switches are visable with their icons.

Looking down at the tender with the front facing up or away from you the switches are as follows:

Volume UP/DOWN Control Switch
Used to turn the maximum volume up or down.

RailSounds ON/OFF Switch
Used to turn off all sounds except whistle and bell. Switch is read when the locomotive is powered up after it has been powered down for at least 10 seconds.

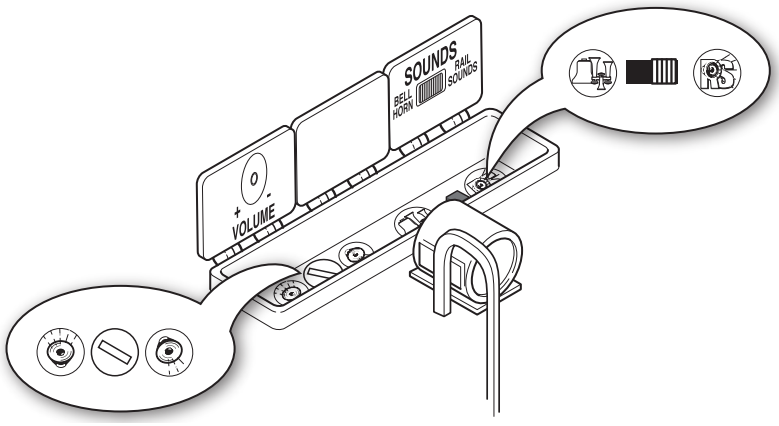

Figure 3. Tender switch locations

LEGACY RailSounds sound system operations

Installing the battery

Although the LEGACY RailSounds sound system is powered through the track, we recommend that you install a nine-volt alkaline battery in the tender to prevent the sound system from shutting down during track power interruptions (for example, at a switch or a dirty section of track). Follow these steps and refer to Figure 4 page 11 as you install the battery.

Note! If the RailSounds sound system turns off during interruptions in track power, you may need to replace the battery.

1. Lift the coal load off the tender body. Refer to Figure 4 page 11.
   Be careful to avoid pulling on any wires.
2. Remove the protective cover from the battery harness.
3. Snap the battery harness onto the nine-volt alkaline battery's terminals.
4. Slide the battery into the battery holder.
5. Replace the coal load on the body. Be careful to avoid pinching wires.

Installing the battery (continued)

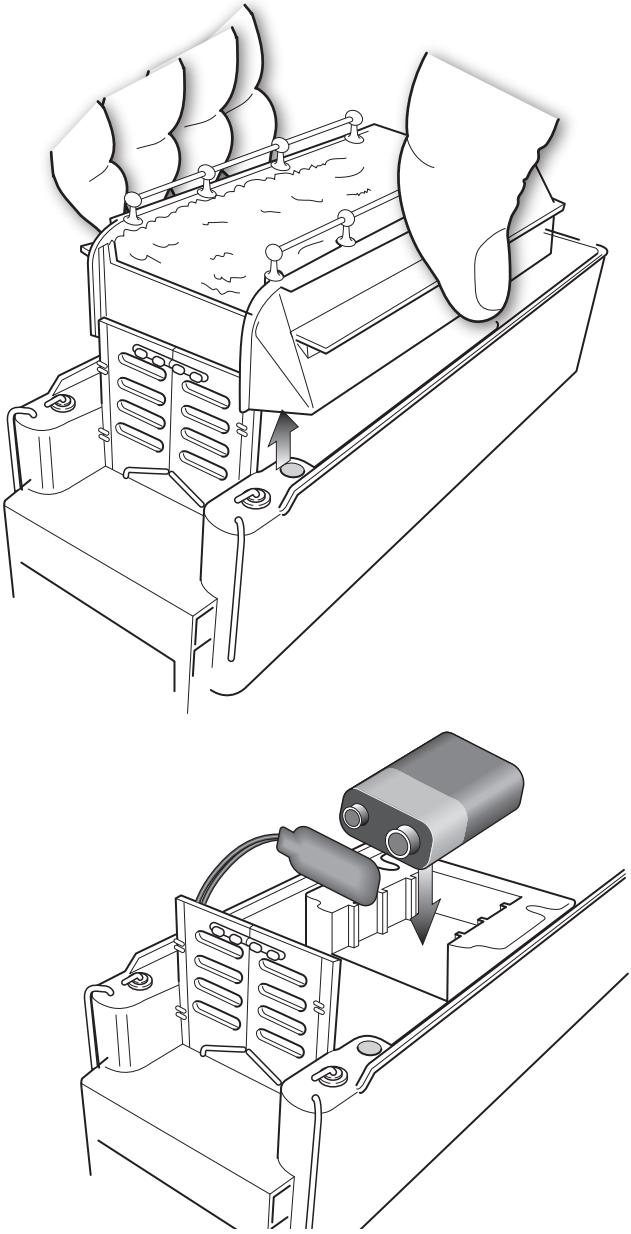

Figure 4. Installing the battery in the tender

LEGACY Control System operations

Note! This section is a brief overview of the LEGACY Control System. For a more in-depth explanation of the LEGACY Control System features, please see your LEGACY Control System Operations Manual.

GET READY TO RUN

Get your engine running now by following the instructions in this guide. We'll power up the track, "address the engine" so it can be controlled by your CAB-2 remote, and learn to use the Velocity Throttle, Whistle, Bell, Brake and Direction commands.

Power Up The Track

If using a PowerMaster, TPC, or ZW refer to the proper manual for the correct method to power up. With your locomotive on the track and ready to roll, power up your track to a constant 18 volts. If a circuit breaker trips when you turn on the Lionel power supply, check the wheels of your locomotive to make sure they are all securely on the track. Check to make sure the track is free of all metals that may cause a short circuit.

Address Your Engine

First, you must address the engine. This "tells" your CAB-2 which locomotive you want to control. This is important when you have more than one engine on your layout.

To address an engine:

1. Press ENG
2. Press 1

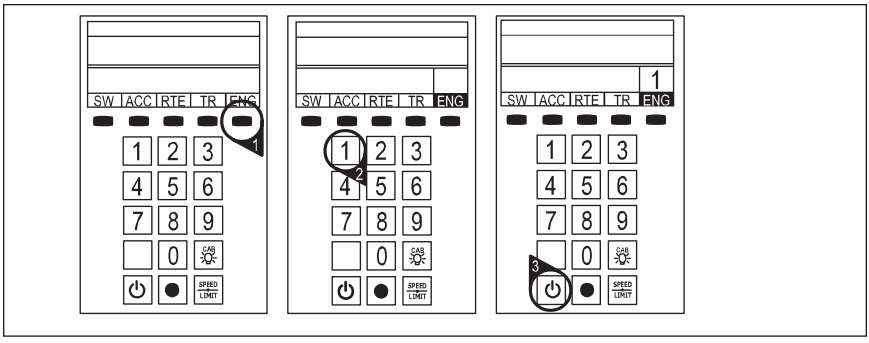

See reference numbers 1, 2, and 3

Start 'Er Up

Now it is time to start up your engine's sound system.

3. Press Start Up
   Your engine sound system will start up and the Touch-screen Control Panel will appear.

LEGACY Control System operations

The LEGACY CAB-2 Remote Controller

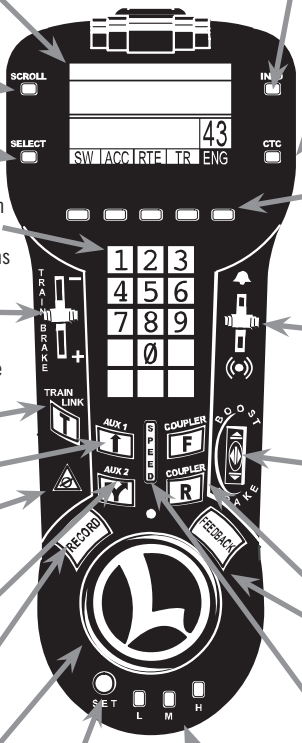

Main Display
Displays real-time information about your railroad system. Displays real-time feedback of operation.

Scroll Button
Navigates through the entire list of Engines, Trains, Switches, etc.

Select Button
Performs addressing by 3-4 digit road number.

Touch Screen Key Pad
A group of touch sensitive keys with icons for each function. These keys serve many purposes and their icons change accordingly.

Train Brake Slider
This slider is used to increase or decrease the amount of Train Brake effecting the engine or train.

Train Link Button
For future use.

AUX-1/Thru Button

Emergency Halt Button
Stops everything on layout, also stops recording playback.

AUX-2/Out Button
Controls switch direction. Turns Headlight ON/OFF

Record Button
Used to record and playback events.

Velocity Throttle
Throttle control over engines, also used to navigate thru info/options.

Set Button
Used to set Engine address and for programming.

Info Button
Used to enter/view the info/options of selected components.

CTC Button
Turns the Remote Control ON and OFF. Used to enter the Remote and Base options. Pressing CTC while in a menu will always bring you back to main screen.

Soft Keys
These keys directly correlate to the 5 selection boxes located at the bottom of the main screen. These are also used in the info/option menus to select options.

Warning Sound Controller
Warning Bell and Variable Whistle/Horn control. Pull down to sound Whistle/ Horn. Push up and release to trigger Warning Bell.

Multi Controller
Boost, Brake, and Direction control. Rock forward for Boost, rock backward for engine brake, and press down for direction change. Click-hold-and rock for absolute direction selection.

Front & Rear Coupler Buttons
Fire couplers.

Feedback Button

Official R.R. Speed Control Bar
Toggles the touchscreen display of R.R. preset speeds and control panel.

Low, Medium, High Momentum Buttons
Used to select the desired momentum of your addressed engine/train/accessory.

LEGACY Control System operations

THE VELOCITY THROTTLE

The Velocity Throttle (that big red rotary knob on the bottom of your Lionel remote) is used to start your engine moving, slow it down or speed it up. Use it simply by turning it clockwise (speed up) or counter-clockwise (slow down).

4. Turn the Velocity Throttle clockwise a small amount. Your engine will begin to move.
5. Experiment with the engine's response to the Velocity Throttle. Turn the Velocity Throttle clock-wise and counter-clock-wise.
6. Slow and stop your engine by turning the Velocity Throttle counter-clockwise.

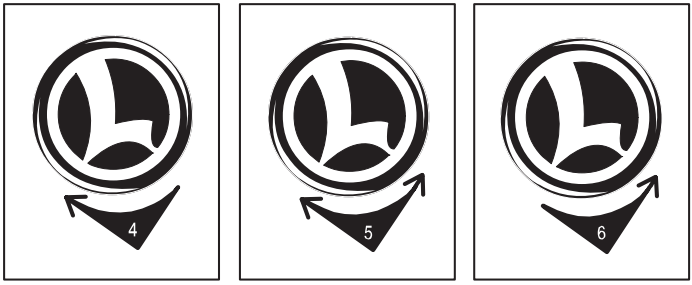

See reference numbers 4, 5, and 6

THE MULTI-CONTROLLER

Direction

The direction of your engine toggles between forward and reverse at the touch of the Multi-Controller.

7. Press the Multi-Controller once. Your engine's lights will change directions and the engine will stop.
8. Turn the Velocity Throttle clockwise a small amount. Your Engine will reverse directions and travel in the opposite direction.

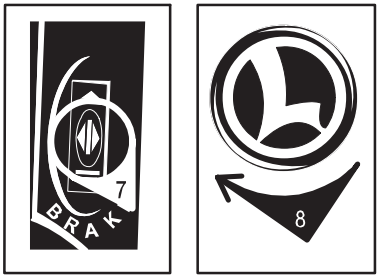

See reference numbers 7, and 8

LEGACY Control System operations

THE MULTI-CONTROLLER (continued)

Boost & Brake

Boost and brake give you another way to control the speed of your train. Boost gives your loco a temporary increase in tractive power, and returns to the previous speed when you release the control, while the brake command slows you down more quickly than the Velocity Throttle alone.

9. Experiment with Boost and Brake. Notice how your engine responds to the Multi-Controller.

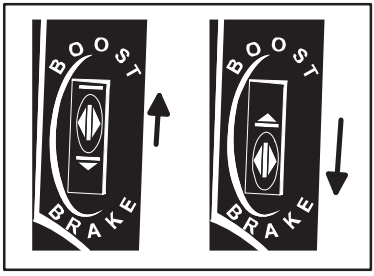

See reference number 9

THE TRAIN BRAKE SLIDER

A Train Brake is used to slow down and limit the top speed of your train by adding a load. The more the Train Brake is applied by pulling the Train Brake Slider down, the more laboring is heard from the engine. Eventually Train Brake application will slow down the train and it is even possible to stop a train by pulling the Train Brake Slider all the way down. A tremendous amount of laboring can be heard whenever you apply the Train Brake in a large amount.

10. Experiment with the Train Brake. Try a small amount of the Train Brake when your engine is moving down the rails at a medium speed. Notice the effect the Train Brake has on sound and speed. Try adding more Train brake and notice that the Train Brake can limit the top speed available to your engine.

Try adding even more Train Brake and notice that the Engine sounds like it is working harder and harder as the Train Brake is applied more.

See reference number 10

LEGACY Control System operations

THE WARNING SOUND CONTROLLER

Warning sounds are an important part of Lionel Railroading. Your Lionel Legacy Control System equipped engines have a real-time variable "quilling" whistle while Lionel TMCC engines do not have this feature.

11. Blow the Whistle by pulling down on the Warning Sound Controller.
12. Try pulling down the Warning Sound Controller various amounts and listen. Notice the difference in intensity of the whistle sound and steam output from the whistle.
13. Push the Warning Sound Controller up once and quickly release. Notice that the bell rings and moves once.
14. Push the Warning Sound Controller up and hold it for 1.5 seconds. Notice that the bell is moving and sounding continuously.
15. Push the Warning Sound Controller up once. Notice that the continuous Bell stops.
16. Experiment with ringing the bell in your own rhythm or continuously, depending on how you push the Warning Sound Controller

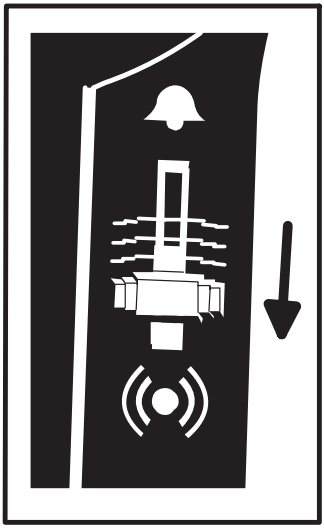

See reference numbers 11, and 12

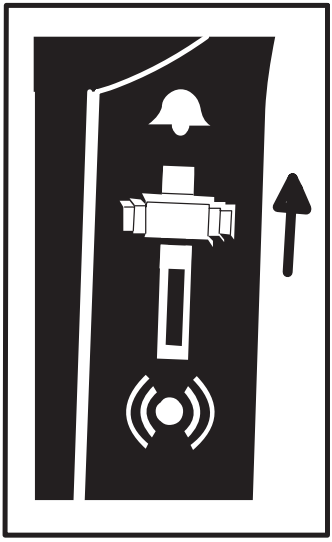

See reference numbers 13, 14, 15, and 16

There are more VISION Line bell control features that will be available with LEGACY update 1.3. You will be notified when the LEGACY System software update is available.

LEGACY Control System operations

THE SPEED BAR

Selection of Preset Speeds

The Speed Bar is used to select a new touch-screen Icon Control set. This set of touch-screen keys is used to select preset speeds. Pressing AUX-1 returns you to the standard control panel.

17. Press, hold and release the Preset Speed icons one by one. Experiment.
18. The speed of the engine changes with each press and release of a different Preset Speed key.
19. You can also use the Velocity Throttle and other action controls in this mode and continue to use Preset speeds at the same time.
20. Repeat step 17.
21. Press AUX-1 to leave the Preset speed mode and return to the Standard Control Panel.
22. Press the speed bar to toggle between the Speed Control Panel and the Standard Control Panel.

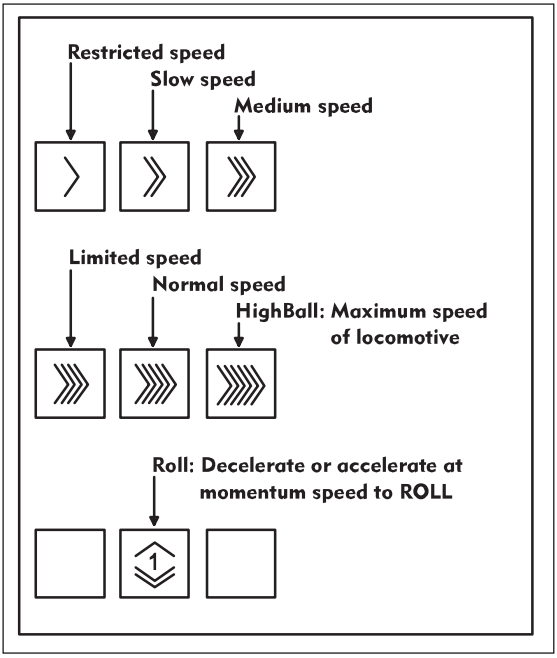

See reference numbers 17, 18, 19, 20, 21, and 22

At this point you know the basics of how to operate your LEGACY Control system. There is a lot of fun waiting as you experience the interaction of the controls and the touch-screen.

Be sure to read the entire Lionel Legacy Control System Manual to get the most from your Lionel products.

Note! There are no TowerCom announcements whan a Preset speed key is pressed. Switcher engines do not have this feature.

LEGACY Control System operations

Blowdown steam effects and sound

Your VISION Line locomotive is equipped with TruRail Steam, a CAB-2 controlled realistic steam effect for the steam blowdown. The effect is triggered when the Blowdown button is pushed (see below). To increase or decrease the amount of steam produced, use the Smoke UP or Smoke DOWN buttons (see below).

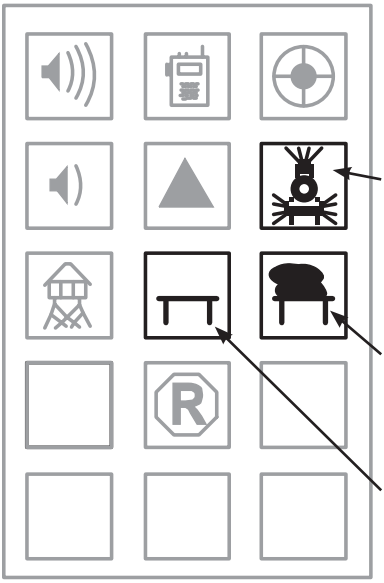

Blowdown
Activates the blowdown sound and steam effect.

Smoke UP
Increases smoke output for the main stack, blowdown, and steam whistle effect.
4 steps up (to max)

Smoke DOWN
Decreases smoke output for the main stack, blowdown, and steam whistle effect.
4 steps down (to off)

Figure 5. Blowdown and Smoke Boost UP/DOWN icons

LEGACY Control System operations

LEGACY RailSounds

Volume UP
Raises the volume of the LEGACY RailSounds sound system background sounds, such as chuff sounds and let-off sounds. The whistle, bell and dialog are unaffected. The default is full volume. The volume setting is retained when track power is turned off

Crew Talk
Engineer begins radio dialog, dispatcher replies. See page 20

Water Injector
Triggers the water pump sounds.

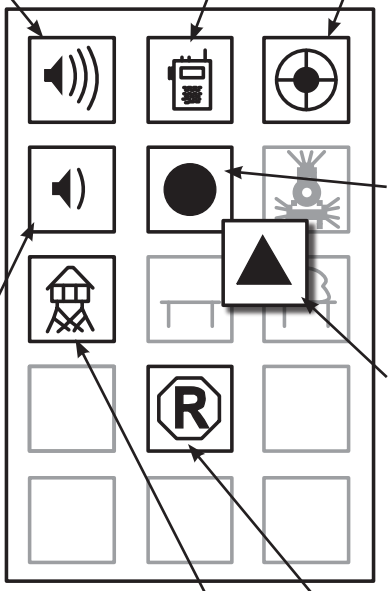

RailSounds Shutdown
Activates the LEGACY RailSounds sound system shutdown sequence when stopped. See page 20
Blowdown effect.

Activates the emergency stop feature while in motion. *(Icon will change as the state of the locomotive changes).* See page 20

Volume DOWN
Lowers the volume of the LEGACY RailSounds sound system background sounds, such as chuff sounds and let-off sounds. The horn, bell, and dialog are unaffected. The volume setting is retained when track power is turned off. Sound volume decreases.

Stops and resets the locomotive
Resets the locomotives direction to forward.

Tower Com
Dispatcher begins radio dialog, engineer replies. See page 20

Figure 6. Legacy RailSounds and RESET icons

LEGACY Control System operations

Activating the CrewTalk dialog and TowerCom announcements

With the LEGACY RailSounds sound system, CrewTalk dialog and TowerCom announcements feature a variety of brief radio conversations between the engineer and dispatcher. All dialog is intelligible, and each comment is followed by at least one automatic response.

CrewTalk dialog is an engineer-initiated radio conversation with the dispatcher. TowerCom announcements are a dispatcher-initiated radio conversation with the engineer. Be sure to listen for the different combinations of words and phrases that comprise these exchanges.

Refer to Table 1 below for the dialog commands. The dialog in the table provides examples of the conversations you can trigger. The actual dialog will vary.

Locomotive	Commands	Example dialog
Stopped	AUX1,	Crew: Ask To Depart Tower: Deny Departure
	AUX1,	Tower: Ask To Standby Crew: Acknowledge
		Crew: Ask To Depart Tower: Approve Departure
		Tower: Approve Departure Crew: Acknowledge
		Crew: Shutdown Announcement Shutdown sequence
Moving	*	Tower: Approved For Arrival Crew: Acknowledge
		Crew: Ask If clear Tower: Confirm All Clear
		Tower: Order Emergencey Stop Crew: Acknowledge

*Activating while the locomotive is in motion enables an arrival conversation for 30 seconds. If the train stops within this time, pressing will play this special conversation.

Table 1. LEGACY Remote Controller dialog commands

LEGACY Control System operations

Assigning your locomotive a new ID#

As your roster of Command Control-equipped locomotives grows, you will want to give each unit a unique ID#. The locomotive will respond to commands associated with its ID# while all other units will disregard these commands.

1. Slide the program run switch on your locomotive to the PROG position. See Figure 2 on page 8.
2. Place the locomotive and tender on the track.
3. Connect the LEGACY Base and plug it in.
4. Power up the track.
5. Press **ENG**.
6. Enter the unique ID#. Choose any number from 1 to 99 that has not been assigned to another locomotive (**ENG**). We recommend using a part of your locomotive's road number.
7. Press **SET**. The locomotive's whistle will sound, or the headlights will flash if the RailSounds sound system is off.
8. Slide the program run switch back to the RUN position.

   The locomotive's ID# has been set. Be sure to record the new ID# for your reference.

Reprogramming your locomotive to restore features

If your locomotive is unresponsive to your commands in the Command Control environment, we recommend that you follow this procedure to reset your locomotive. All factory default settings will be restored when you reprogram the locomotive.

1. Slide the program run switch to the PROG position.
2. Plug in and connect your LEGACY Base.
3. Place your locomotive and tender on the track, then power up the track.
4. Press **ENG** and enter the locomotive's ID#.
5. Press **SET**.
6. Press **INFO**
7. Press **AUX PROG**
8. Enter **1** for this particular locomotive.
9. Press **CTC** to exit programming mode.
10. Turn off track power and wait ten seconds.
11. Slide the program run switch back to the RUN position.

At this point, your locomotive has been reset. Restore power to the track and operate the locomotive as usual. Be sure to use the ID# entered in Step 4.

TrainMaster Command Control operations

TrainMaster Command Control operations

In addition to your transformer, to operate your locomotive in the Command Control environment you need a Command Base (available separately, 6-12911) and a CAB-1 Remote Controller (available separately, 6-12868).

Your commands are sent by the CAB-1 Remote Controller to the Command Base, which translates the command into digital code. That code is sent through the outside rails to your locomotive, which will not respond until it recognizes its unique ID#. TrainMaster Command Control gives you the power to operate multiple Command-equipped locomotives on the same track at the same time.

Keep in mind that track power is like gasoline in the tank of a car—it gives you the power to go places, but it doesn't tell you where to go or how fast to get there.

Operating your locomotive in the Command Control environment

1. **Turn off track power and plug in the Command Base.** Be sure that the Command Base is connected to the outside rail or to the Common/Ground/U terminal on your track power supply.
2. **Place your locomotive on Lionel or Lionel compatible O-54 or larger track.**
3. **Increase track voltage to full power (no more than 19 volts AC).** On PowerMasters, slide the CMD/CONV switch to CMD. Program Track Power Controllers to Command Control operation.

Caution! Power your locomotive with an alternating-current (50-60Hz AC) transformer only. Powering your locomotive with a direct-current (DC) transformer, or in excess of 19 volts AC, may result in damage to sensitive electronic components.

4. **Press ENG and enter the ID# to address your locomotive with your CAB-1 Remote Controller.** All Lionel locomotives come factory-programmed as ID# 1. To change the ID#, see page 27.
5. **Throttle up and move 'em out!** Your locomotive will respond to every command from your CAB-1 Remote Controller.

TrainMaster Command Control operations

Using the LEGACY RailSounds sound system in the TrainMaster Command Control environment

Operating in the TrainMaster Command Control environment allows you access to many of the features of the LEGACY RailSounds sound system. The CAB-1 Remote Controller activates features such as TowerCom announcements, CrewTalk dialog, and coupler release sounds. Refer to pages 25-26 to learn how the LEGACY RailSounds sound system is integrated into TrainMaster Command Control operations.

Note! For proper operation of the LEGACY RailSounds sound system during track power interruptions and for the locomotive shutdown sequence, you must install a nine-volt alkaline battery. See pages 10-11.

In the TrainMaster Command Control environment, you will experience these features of the LEGACY RailSounds sound system. See page 9 to adjust the volume.

- **DynaChuff.** Your locomotive's speed automatically determines the level of chuffing sounds. At low speeds, the chuffing is relaxed. When you highball down the mainline, the chuffing intensity is labored.
- **Whistle.** A different whistle sound and steam effect at different speeds.
- **Authentic bell.** Press **BELL** on your CAB-1 Remote Controller to begin the sound and syncronized movment, then press **BELL** a second time to discontinue the effect.
- **Squealing brakes.** Press the **BRAKE** button and listen for the squealing of the locomotive's brakes as the locomotive slows down.
- **Coupler release sounds.** Use your CAB-1 Remote Controller to release the ElectroCoupler, and you get the sounds of the coupler opening.
- **TowerCom announcements.** TowerCom announcements are a dispatcher-initiated radio conversation with the engineer. Depending on the movement of the locomotive, the dialog will change. The LEGACY RailSounds sound system will often use different words and phrases when composing the conversation.
- **CrewTalk dialog.** CrewTalk dialog is an engineer-initiated radio conversation with the dispatcher. Depending on the movement of the locomotive, the dialog will change. The LEGACY RailSounds sound system will often use different words and phrases when composing the conversation.
- **Reverse unit reset sound.** Power down your track, wait three seconds, and listen for the air-release sound—that's the locomotive telling you that its Lionel Command reverse unit has reset to forward. (A nine-volt alkaline battery is required.)
- **Shutdown sequence.** When you turn off track power, you have two seconds to power up again after you hear the reverse unit reset sound. If you do not restore power, you will hear the realistic shutdown sequence and see the steam blowdown effect.

Note! Because track power is off, a battery is required for this sequence to function. See page 10-11 for battery installation.

TrainMaster Command Control operations

CAB-1 Remote Controller commands

The CAB-1 Remote Controller commands are detailed below. ***The corresponding RailSounds sound system effects are in bold italic type.***

COUPLER F — Releases the ElectroCoupler on the front of the locomotive. ***Coupler release sound.***

COUPLER R — Releases the ElectroCoupler on the rear of the tender. ***Coupler release sound.***

AUX 1 — Activates the numeric keypad. ***Short steam release sound.***

AUX 2 — Toggles the headlight and rear light on and off.

Accelerates the locomotive with a clockwise rotation. Decelerates the locomotive with a counter-clockwise rotation. ***Speed-dependent chuffing sounds. DynaChuff dynamic chuffing effect.***

WSTL / HRN — Activates the locomotive's whistle. Release the button to discontinue the sound. ***Whistle sound, steam effect.***

BELL — Toggles the bell sound on and off. ***Bell sound and coordinated movement.***

DIR — Changes the locomotive's direction. The locomotive decelerates to a stop and continues in the opposite direction when you increase the throttle. ***Air release sound.***

BOOST — Increases the locomotive's speed while the button is pressed. Release the button to return to the initial speed. ***Labored chuff.***

BRAKE — Decreases the locomotive's speed while the button is pressed. ***Squealing brake sounds.***

HALT — Shuts down all PowerMasters on your railroad. Stops all TrainMaster Command Control-equipped locomotives in operation. Use **HALT** only in emergency situations.

L = 32 speed steps
M = 100 speed steps
H = 100 speed steps with momentum.

TrainMaster Command Control operations

CAB-1 Remote Controller numeric keypad commands

When you press the **AUX1** button on your CAB-1 Remote Controller, you turn the numeric keypad into ten command buttons. After you press the **AUX1** button, you will be able to press any numbered button until you address a different product. ***The corresponding RailSounds sound system effects are in bold italic type.***

0 Stops and resets the locomotive. Resets the locomotive's direction to forward. ***Short whistle sound.***

1 Raises the volume of the LEGACY RailSounds sound system background sounds, such as chuff sounds and let-off sounds. The whistle, bell and dialog are unaffected. The default is full volume. The volume setting is retained when track power is turned off. ***Sound volume increases.***

2 Engineer begins radio dialog, dispatcher replies (see page 26). ***CrewTalk communication.***

3 Starts the RailSounds sound system if the locomotive was previously shutdown. Triggers the water pump sounds.

4 Lowers the volume of the LEGACY RailSounds sound system background sounds, such as chuff sounds and let-off sounds. The horn, bell, and dialog are unaffected. The volume setting is retained when track power is turned off. ***Sound volume decreases.***

5 Activates the LEGACY RailSounds sound system shutdown sequence when stopped. Activates the emergency stop feature while in motion. Note that in the shutdown sequence, the smoke unit will turn off if it was already on. To turn off the smoke unit, press **AUX1**, **8** or use the smoke unit Smoke ON/OFF switch.

6 Triggers the ***"Blow Down" sound and steam effects.***

7 Dispatcher begins radio dialog, engineer replies (see page 26). ***TowerCom announcement.***

8 Turns off the smoke units. ***Let-off sound.***

9 Turns on the smoke units if the smoke unit's switch is in the ON position. Be sure to add smoke fluid before turning on the smoke unit to prevent damage to your locomotive. ***Let-off sound.***

Note! **AUX1**, **8** and **9** function only if the locomotive's smoke unit switch is in the ON position.

Note! See the Lionel web site for more information.

TrainMaster Command Control operations

Activating the CrewTalk dialog and TowerCom announcements

With the LEGACY RailSounds sound system, CrewTalk dialog and TowerCom announcements feature a variety of brief radio conversations between the engineer and dispatcher. All dialog is intelligible, and each comment is followed by at least one automatic response.

CrewTalk dialog is an engineer-initiated radio conversation with the dispatcher. TowerCom announcements are a dispatcher-initiated radio conversation with the engineer. Be sure to listen for the different combinations of words and phrases that comprise these exchanges.

Refer to Table 2 below for the dialog commands. The dialog in the table provides examples of the conversations you can trigger. The actual dialog will vary.

Locomotive	Commands	Example dialog
Stopped	AUX1, 2	Crew: Ask To Depart Tower: Deny Departure
	AUX1, 7	Tower: Ask To Standby Crew: Acknowledge
	2	Crew: Ask To Depart Tower: Approve Departure
	7	Tower: Approve Departure Crew: Acknowledge
	AUX1, 5	Crew: Shutdown Announcement Shutdown Sequence
Moving	AUX1, 2 *	Crew: Ask For Clearance To Arrive Tower: Approve Arrival
	AUX1, 7 *	Crew: Clear For Arrival Tower: Acknowledge
	2	Tower: Ask If Clear Crew: Confirm All Clear
	7	Tower: Announce All Clear Crew: Acknowledge
	AUX1, 5	Tower: Order Emergencey Stop Crew: Acknowledge

*Activating either AUX1, 2 or AUX1, 7 while the locomotive is in motion enables an arrival conversation for 30 seconds. If the train stops within this time, pressing 2 or 7 will play this special conversation.

Table 2. CAB-1 Remote Controller dialog commands

TrainMaster Command Control operations

Assigning your locomotive a new ID#

As your roster of TrainMaster Command Control-equipped locomotives grows, you will want to give each unit a unique ID#. The locomotive will respond to commands associated with its ID# while all other units will disregard these commands.

1. Slide the program run switch on your locomotive to the PROG position. See Figure 2 on page 8.
2. Place the locomotive and tender on the track.
3. Connect the Command Base and plug it in.
4. Power up the track.
5. Press **ENG**.
6. Enter the unique ID#. Choose any number from 1 to 99 that has not been assigned to another locomotive (**ENG**). We recommend using a part of your locomotive's cab number.
7. Press **SET**. The locomotive's whistle will sound, or the headlights will flash if the RailSounds sound system is off.
8. Slide the program run switch back to the RUN position.

   The locomotive's ID# has been set. Be sure to record the new ID# for your reference.

Reprogramming your locomotive to restore features

If your locomotive is unresponsive to your commands in the TrainMaster Command Control environment, we recommend that you follow this procedure to reset your locomotive. All factory default settings will be restored when you reprogram the locomotive.

1. Slide the program run switch to the PROG position.
2. Plug in and connect your Command Base.
3. Place your locomotive and tender on the track, then power up the track.
4. Press **ENG** and enter the locomotive's ID#.
5. Press **SET**.
6. Press **ENG** and enter the locomotive's ID# again.
7. Press **AUX1**.
8. Enter **1** for this particular locomotive.
9. Turn off track power and wait ten seconds.
10. Slide the program run switch back to the RUN position.

At this point, your locomotive has been reset. Restore power to the track and operate the locomotive as usual. Be sure to use the ID# entered in Step 4.

Conventional transformer operations

Operating your locomotive in the conventional environment

Your locomotive is capable of operating in the conventional environment with nothing more than a standard Lionel alternating-current (AC) transformer.

In the conventional environment, your locomotive cycles through a repeating pattern of operations: forward, neutral, reverse, neutral, and so on. To advance to the next operation, press the **DIRECTION** button on your transformer. Alternately, you could use the throttle to briefly turn off track power so that the locomotive advances to the next operation when power is restored.

Once you cycle the locomotive into forward or reverse, you control your locomotive's speed by varying track voltage with the transformer's throttle. To increase the speed of the locomotive, you increase track voltage. To decrease the speed, you decrease track voltage. To stop the locomotive and to change directions (or to enter neutral), track voltage is turned off or interrupted.

Use the **HORN** and **BELL** buttons on your transformer to activate these features. If your transformer is not equipped with these controls, separate buttons are available (610-5906-001). Please refer to page 34 of this manual.

To experience all of your locomotive's features, we recommend operating in the LEGACY Command Control environment. With a simple one-wire connection, you can use the CAB-2 Remote Controller to access all of the functions of your locomotive. Refer to pages 12-21 to see how to operate your locomotive in the LEGACY Command Control environment.

Conventional transformer operations

Operating your locomotive in the conventional environment (continued)

1. **Place your locomotive on Lionel or Lionel-compatible O-54 or larger track.**
2. **Power your locomotive at 12-18 volts with your alternating current (AC) transformer.**

Caution! Power your locomotive with an alternating-current (AC) transformer only. Powering your locomotive with a direct-current (DC) transformer, or in excess of 19 volts AC, may result in damage to sensitive electronic components. 50-60 HZ AC is required.

3. **Wait three to eight seconds as your locomotive determines whether it is in a conventional environment or a TrainMaster Command Control environment.**
   When the locomotive has determined that a TrainMaster Command Base is not connected to the track, the locomotive's headlight will illuminate and the LEGACY RailSounds sound system will start. You are ready for operation in the conventional environment.
4. **Move 'em out!**
   Press the **DIRECTION** button on your transformer to sequence your locomotive through the repeating pattern of operations: forward, neutral, reverse, neutral, and so on. You may also briefly turn off track power to advance the locomotive to the next operating state. Adjust the throttle until your locomotive moves at your desired speed.

Note! When placing your locomotive on your layout for the first time, it will start out in neutral. Thereafter, it will start in forward after every power interruption lasting five seconds or longer.

We recommend that you operate your LEGACY locomotive with The Odyssey II Speed Control System turned on. You may choose to operate your locomotive without speed control by placing the Odyssey II Speed Control System switch to the OFF position. See Figure 2 on page 8.

Use the **HORN** and **BELL** buttons on your transformer to activate those features. Refer to page 34 if your transformer is not equipped with those buttons. Adjust the volume using the volume control knob located under the tender water hatch. Refer to Figure 3 on page 9.

Conventional transformer operations

Using the LEGACY RailSounds sound system in the conventional environment

When you first power up your locomotive, you will hear the sounds of the locomotive at rest. As the locomotive moves, the chuffing sounds automatically increase with the locomotive's speed. In the conventional environment, the whistle and bell sounds are activated by your transformer controls if so equipped. See figure 8 page 34.

To silence the chuffing sounds, slide the LEGACY RailSounds sound system switch located under the hatch on top of the tender to the BELL HORN position before you power up the locomotive or after the locomotive has been powered down for a minimum of ten seconds. The whistle and bell sounds will still be active. To adjust the volume, use the volume control knob located under the hatch on top of the tender.

Note! For proper operation of the LEGACY RailSounds sound system during track power interruptions and for the locomotive shutdown sequence, you must install a nine-volt alkaline battery. See pages 10-11.

In the conventional environment, you will experience several features of the LEGACY RailSounds sound system.

- **DynaChuff.** Your locomotive's speed automatically determines the level of chuffing sounds. At low speeds, the chuffing intensity is relaxed. When you highball down the mainline, the chuffing intensity is labored.
- **Whistle.** A different whistle sound at different speeds and whistle steam effect.
- **Authentic bell.** Press **BELL** on your transformer to begin the syncronized bell movement and sounds. Press **BELL** a second time to discontinue the effect.
- **CrewTalk dialog and TowerCom announcements.** These brief conversations between the train crew and the tower are triggered by short whistle blasts.
- **Reverse unit reset sound.** Power down your track, wait three seconds, and listen for the air-release sound, which is the locomotive telling you that its Lionel Command reverse unit has reset to forward (a nine-volt alkaline battery is required).
- **Shutdown sequence.** When you turn off track power, you have two seconds to power up again after you hear the reverse unit reset sound. If you do not restore power, you will hear the realistic shutdown sequence. Because track power is off, a battery is required for this sequence to function.

Conventional transformer operations

Activating the CrewTalk dialog and TowerCom announcements

In the conventional environment, CrewTalk dialog and TowerCom announcements are triggered by short whistle blasts and vary with the state of the locomotive.

- If the locomotive has been stopped for less than 15 seconds, a short whistle blast triggers a “please standby” dialog (a 9V battery is required for this sequence).
- If the locomotive has been stopped for longer than 15 seconds, a short whistle blast triggers a “cleared outbound” dialog.
- If the locomotive is moving, a short whistle blast triggers an “all clear ahead” dialog.

Conventional transformer operations

Locking your locomotive into a single direction

When the Command reverse unit switch is in the RUN position, your locomotive sequences through a repeating pattern of operations: forward, neutral, reverse, neutral, and so on.

To “lock” your locomotive into a single direction (for example, to operate in forward only), you can deactivate the Command reverse unit’s sequencing function.

1. Use your transformer’s **DIRECTION** button or interruptions in track power to get your locomotive moving in the desired direction or into neutral.
2. Slow the locomotive down without stopping (reduce the throttle without turning off track power).
3. Slide the Command reverse unit switch to the PROG position. At this point, the locomotive is “locked” into your chosen direction. See Figure 2 on page 8 for the location of this switch.

To restore the forward-neutral-reverse sequence, just slide the Command reverse unit switch back to the RUN position.

Conventional transformer operations

Uncoupling your locomotive in the conventional environment

Your locomotive features an ElectroCoupler that is released by remote control at any point around your layout in the TrainMaster Command Control environment.

In the conventional environment, the ElectroCoupler will not open manually or by using a Remote-Control Track section. To couple your locomotive in the conventional environment, you must rely on a piece of rolling stock equipped with a magnetic coupler. Simply release the magnetic coupler and couple the rolling stock to the locomotive, even if the ElectroCoupler is closed.

Keep in mind that you may still make use of Lionel Remote-Control Track sections (6-65530 for O gauge; 6-12746 and 6-65149 for O-27 gauge; and 6-12020 and 6-12054 for FasTrack layouts) with the magnetic couplers on the rolling stock. Place the trigger disc on the magnetic coupler over the central coil on the Remote-Control Track section, then press UNCOUPLE on the track section's controller. As illustrated in Figure 7, the magnetic field pulls the disc downward, releasing the coupler.

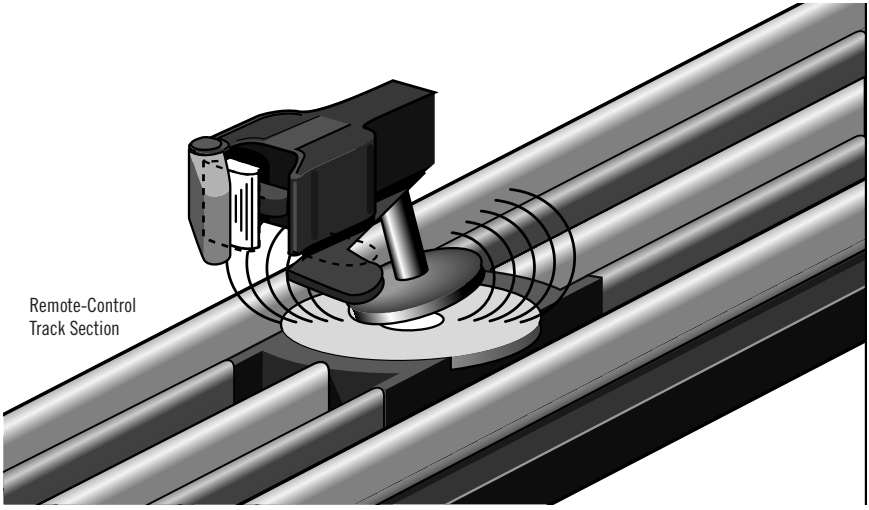

Figure 7. Magnetic coupler operation

Odyssey II Speed Control system operations

Odyssey II Speed Control system operations

The Odyssey II Speed Control system is “cruise control” for your locomotive. Once the speed control is set, your locomotive will maintain a constant speed, no matter what load is placed on the locomotive or what grades you have on your layout. The Odyssey II Speed Control system also allows for extremely slow movement that will amaze any scale enthusiast.

Odyssey II Speed Control System LEGACY Control operation

In LEGACY Control System CAB-2 mode, Odyssey II Speed Control system provides 0-199 speed steps. For a more in-depth explanation of the LEGACY Control System features, please see your LEGACY Control System operations manual.

Odyssey II Speed Control system TrainMaster Command Control operation

When the Odyssey II Speed Control system is activated, changes in the speed of the locomotive will correspond to each signal from the Command Base. For example, when you address the locomotive and slowly turn the throttle knob, the first flash of the red light on the Command Base corresponds to the first speed step, which is the slowest speed of the locomotive. The locomotive will maintain that speed until you increase or decrease the throttle.

In TrainMaster Command Control CAB-1 mode, Odyssey II Speed Control System now provides selectable resolution and momentum. L=32 speed steps, M= 100 speed steps, and H= 100 speed steps with momentum. See page 13.

Odyssey II Speed Control system conventional transformer operation

The Odyssey II Speed Control system is automatically operational when you operate your locomotive in conventional (non-Command Control) mode, as long as the Odyssey II Speed Control system switch is in the ON position (see page 8 Figure 2). This means that your locomotive will maintain a constant speed, compensating for grades, loads, and turns. Simply use your transformer’s throttle to adjust the speed of your locomotive.

Note! Because of the way that speed control operates in conventional mode, you will notice a slight delay between adjusting your transformer throttle and the change in the speed of your locomotive. If you desire instantaneous response to throttle changes, turn off the Odyssey II Speed Control system using the Odyssey II Speed Control switch (see Figure 2 on page 8).

Conventional RailSounds operations

Installing a Lionel Sound Activation Button for conventional operation

If your transformer lacks **WHISTLE** and **BELL** buttons, you will need to install Lionel no. 610-5906-001 Sound Activation Buttons (available separately) to activate the locomotive's whistle and bell sounds.

Connect the buttons as shown below. Be sure that all track power passes through the Sound Activation Button(s). Do not bypass the buttons.

For AC transformers lacking a bell button

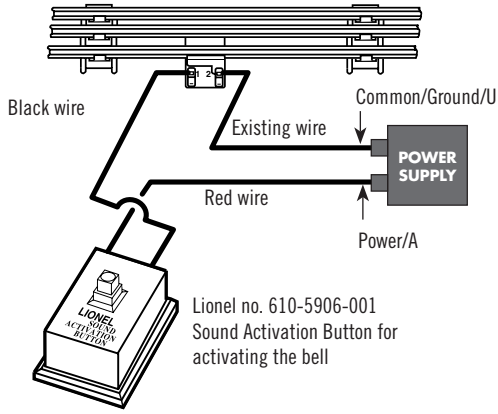

For AC transformers lacking bell and Whistle buttons

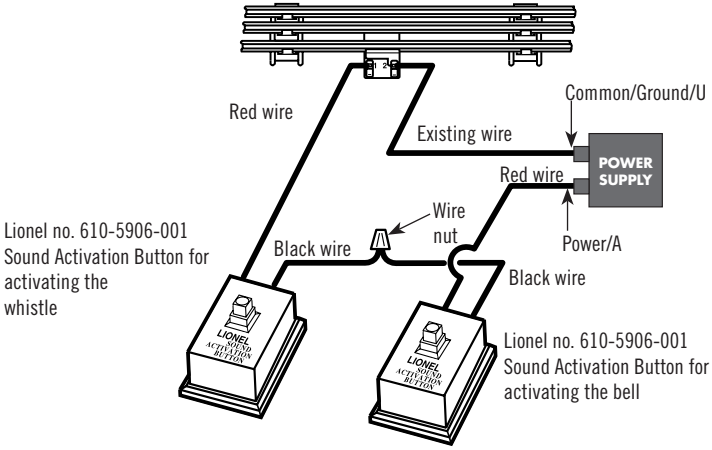

Figure 8. Sound activation button

Maintaining and servicing your locomotive

Adding fluid to your locomotive's smoke generators

Your locomotive is equipped with two smoke generators that produce a safe, clean, white smoke during operation.Your VISION Line CC2s has one smoke generator for the main smoke stack and one for the auxiliary smoke unit. The auxiliary unit is for the new TruRail features of whistle and blowdown steam. It is located under a removable dome right in front of the whistle. The dome is held on with one magnet. Lift up the dome and place the included funnel into the smaller hole. For the first time we recommend using 20 drops of smoke fluid. From then on 10 to 20 drops will be sufficient. The larger hole is for the magnet only, do not let fluid get in the hole. For the main smoke stack at the front of the engine 20 drops will be enough, and 10 to 20 thereafter. DO NOT EXCEED 20 DROPS as this can cause your smoke units to become oversaturated allowing leakage onto the electronics. Note that operating your locomotive's smoke unit without smoke fluid will cause damage to the heating element.

If you prefer to operate your locomotive without smoke, locate the smoke unit switches under the rear sand dome and slide them to the OFF position. Refer to Figure 2 on page 8 for the location of these switches.

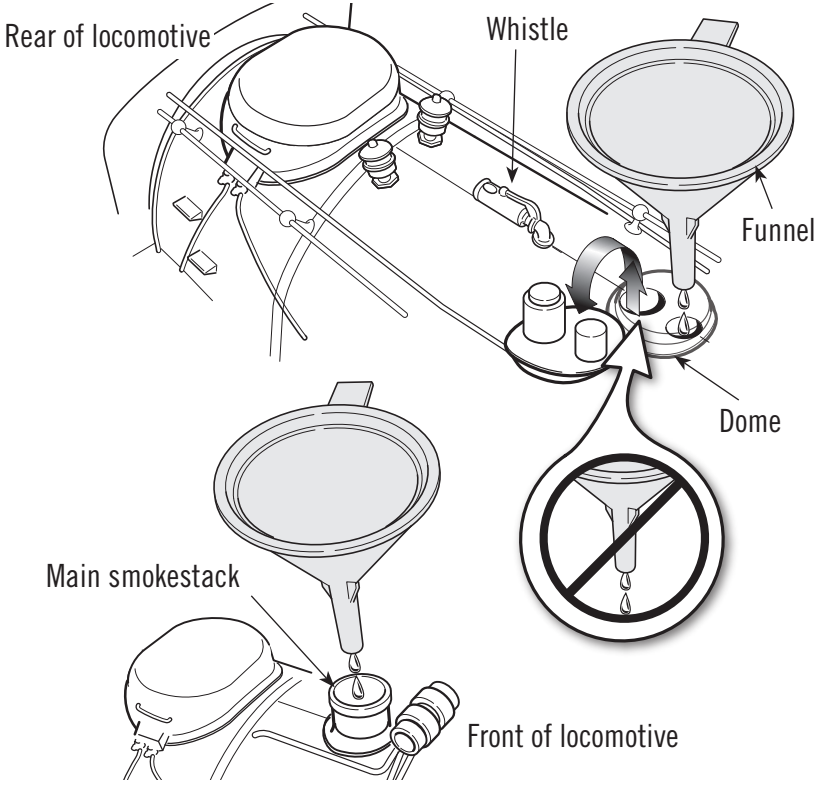

Figure 9. Smoke fluid locations

Maintaining and servicing your locomotive

Lubricating your locomotive

Help your Lionel locomotive lead a long and productive life on your railroad by maintaining it properly. To keep your locomotive lubricated, we recommend that you purchase a Lionel Lubrication and Maintenance Kit (6-62927), available from your authorized Lionel dealer.

When you find that the lubrication points illustrated in Figure 10 appear dry, lubricate your locomotive after you have removed any accumulated dirt and dust. There are two basic rules to keep in mind when you are lubricating your locomotive: use only a small amount of lubrication and avoid getting grease or oil on your locomotive's wheels, roller pick-ups, or the track.

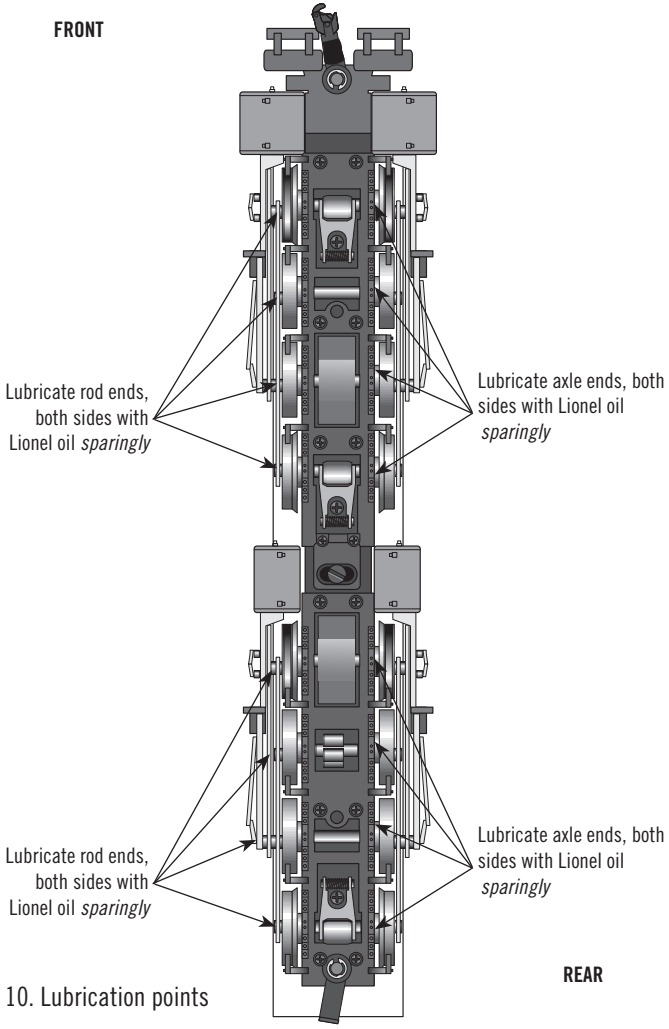

Figure 10. Lubrication points

Maintaining and servicing your locomotive

Maintaining your locomotive's handrail antenna

The handrails on your locomotive are the antennas that receive the digital communication from the Command Base. For optimum reception, the handrails have been insulated from the die-cast body. Please handle the locomotive carefully to avoid handrail damage. The handrails should not touch the locomotive's body.

If your locomotive appears to have problems receiving communications from the Command Base, be sure that the ends of the handrails are insulated from the body with either an insulating washer or handrail stanchion.

Servicing your locomotive's lamps

Note! Before having the headlamp in your locomotive changed, be sure to check that the **AUX2** command was not used to turn the headlamp off.

Your locomotive is illuminated by several LEDs (light emitting diodes) and are not user-serviceable. They can be replaced by your authorized Lionel Service Center, if it is ever required. **You should never attempt this yourself due to the complexity of this VISION Line locomotive.**

Maintaining and servicing your locomotive

Tire-Traction

Your locomotive is equipped with traction tires. This means that four of the drive wheels are fitted with rubber traction tires to enhance tractive effort so your locomotive can pull many cars at once.

Lionel has provided extra traction tires to replace the installed traction tires if they ever wear out. The traction tires are replaced by unscrewing the drive rod screws using the supplied wrench. Slip off the old traction tire and remove it from under the drive rod. Place the new traction tire (Lionel part # 600-0222-108) on the wheel and re-tighten the drive rod screw.

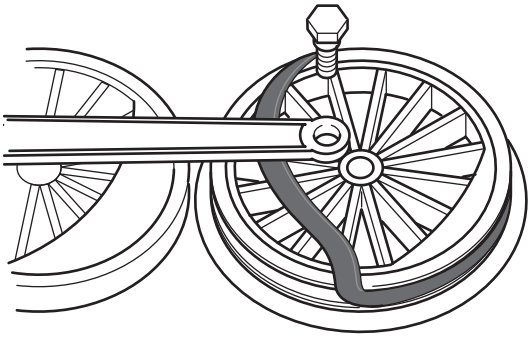

Figure 11. Replacing traction tires

Notes

Lionel VISION Line™ Locomotive Warranty

This Lionel VISION Line locomotive, including all mechanical and electrical components, moving parts, motors and structural components, with the exception of LIGHT BULBS, LED's & TRACTION TIRES are warranted to the original owner-purchaser for a period of two years from the original date of purchase against original defects in materials or workmanship when purchased through an Authorized Lionel Value Added Dealer*.

This warranty does NOT cover the following:

- Normal wear and tear
- Light bulbs or LED's
- Defects appearing in the course of commercial use
- Damage resulting from abuse/misuse of the product

The original owner-purchaser MUST register this product following the instructions on the enclosed Warranty Registration Card to activate the 2-year warranty, which is effective from the original date of purchase.

Transfer of this product by the original owner-purchaser to another person voids this warranty in its entirety. Modification of this product in any way; visually mechanically or electronically, voids the warranty in its entirety. In the event service is required to this Vision Line locomotive, Lionel will, upon request of the original owner-purchaser, provide a prepaid UPS shipping label for the return of this product to the Lionel Service Department.

Under no circumstances will shipping be reimbursed if a method other than a prepaid shipping label from Lionel is used. In the event the defective product cannot be repaired and a suitable replacement is not available, Lionel will, at its discretion, refund the original purchase price of the locomotive.

This warranty will expire if the product is not registered within 3 years from the date of manufacture. An extended warranty may be available for purchase. Please contact Lionel Customer Service for more information regarding extended warranties.

In no event shall Lionel LLC be held liable for incidental or consequential damages.

Some states do not allow the exclusion or limitation of incidental or consequential damages, so the above exclusion may not apply to you.

This warranty gives you specific legal rights and you may have other rights which vary from state to state.

Instructions for Obtaining Service

If service for this Lionel VISION Line locomotive is required please call Lionel Customer Service FIRST at 586-949-4100 and follow the prompts to reach a Customer Service Representative. You must register your Vision Line locomotive following the instructions on the Warranty Registration card enclosed in this box. You can also write Lionel at 26750 Twenty Three Mile Road, Chesterfield, MI 48051 to request a return authorization number and prepaid shipping label. You MUST have a return authorization (RA) number to ensure your locomotive can be properly tracked upon receipt at Lionel LLC.

Once you have your Return Authorization (RA) number, make sure the item is packed in its original Styrofoam inner container which is placed inside the original outer display box (this will help prevent damage during shipping and handling).

Please make sure you have followed all of the above instructions carefully before returning any item for service. You may choose to have your product repaired by one of Lionel's Factory Trained Authorized Service Stations after the warranty has expired. A reasonable service fee should be expected once the product warranty has expired.

Warranty Information

Please follow the instructions on the Warranty Registration Card included in this box to activate your 2-year warranty. Please keep a copy of your original receipt along with the form below and your Vision Line locomotive ID number as a reference, should warranty service be required in the future.

*A complete listing of Lionel Authorized Value Added Dealers can be found by calling 1-800-4-LIONEL or by visiting our website at www.lionel.com.

Products that are more than 3 years old, from date of manufacture, are not applicable for warranty coverage, however an extended warranty may be available for purchase, please contact Lionel Customer Service for details.

Name_____

Address _____

Place of Purchase _____

Date of Purchase_____

Product Number _____

Product Description _____